MIQ-04

MORX

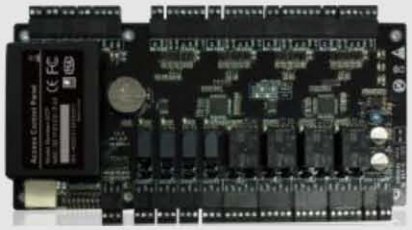

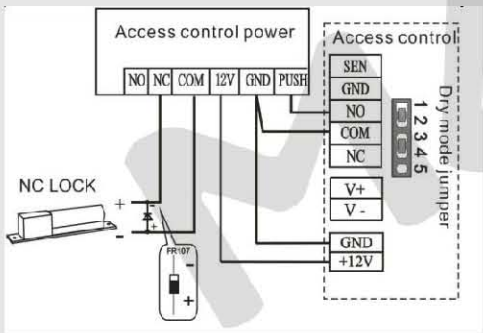

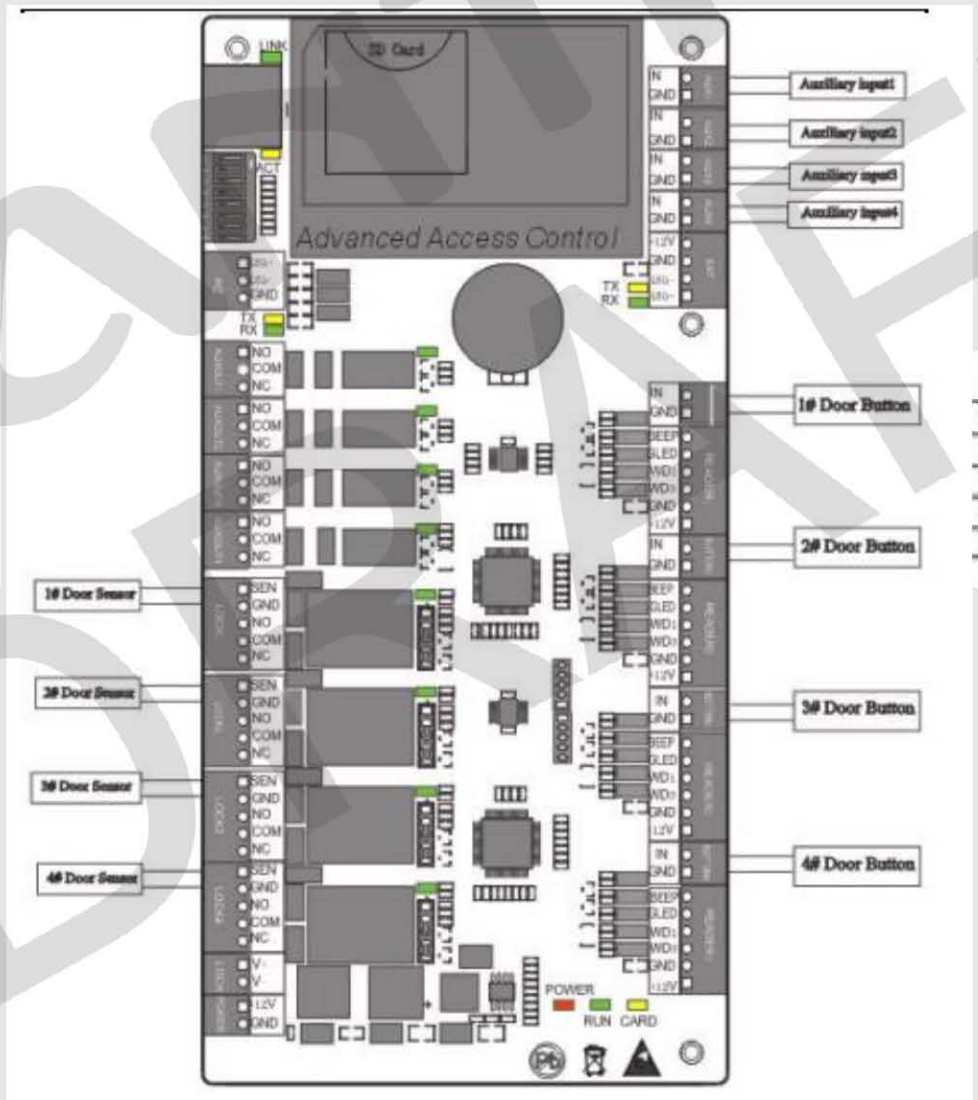

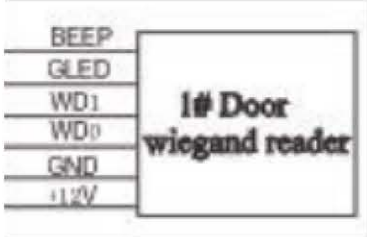

CONTRACT DRAFT